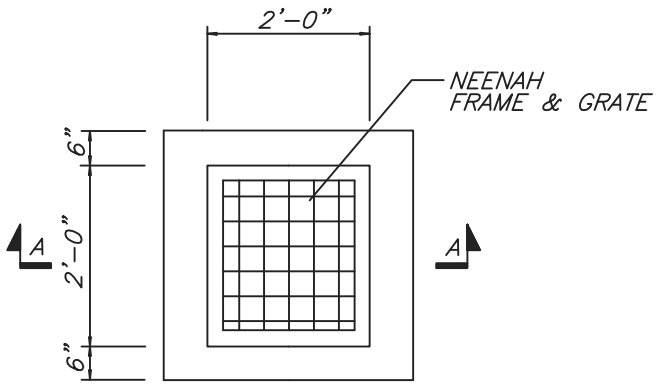

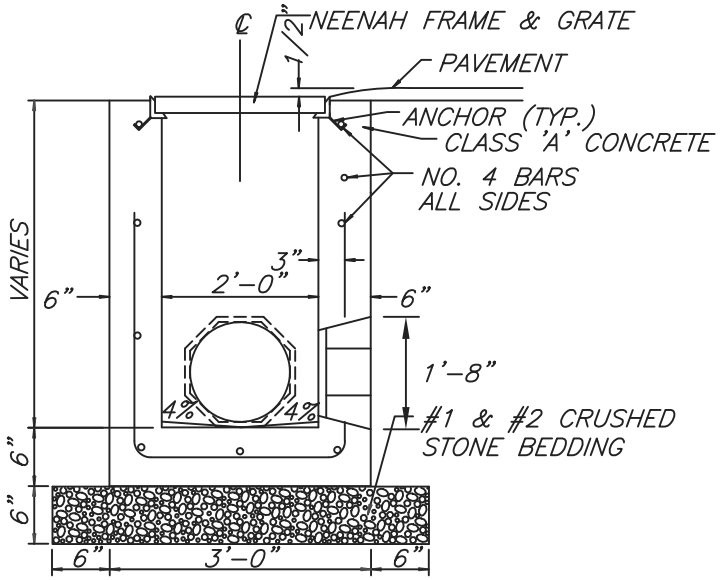

SECTION A-A

GENERAL NOTES

1. CONCRETE SHALL BE 4000 PSI @ 28 DAYS WITH 5%-9% AIR ENTRAINMENT.
2. STEEL REINFORCING SHALL BE GRADE 60 AND MEET ASTM STANDARDS.
3. CATCH BASIN SHALL MEET OR EXCEED AASHTO HS-20 LOADING.
4. ALL KNOCKOUTS SHALL HAVE A 2"-2-1/2" THICKNESS AND A 1" DIAMETER WEEP HOLE.
5. GRATES SHALL BE MANUFACTURED BY NEENAH FOUNDRY & BE CAST IRON BICYCLE PROOF GRATES. THE STEEL FRAME SHALL BE RECESSED INTO THE TOP OF CATCH BASIN. GRATE AND FRAME SHALL BE FLUSH WITH THE CONCRETE.
6. CATCH BASIN SHALL BE KISTNER CONCRETE 24" SQUARE INSIDE DIMENSION CATCH BASIN OR APPROVED EQUAL.

STANDARDS

1. NYSDOT SPECIFICATIONS

MANUFACTURER

1. NEENAH FOUNDRY
2. KISTNER CONCRETE

STANDARD CATCH BASIN DETAIL

N.T.S.

ISSUE DATE: SEPTEMBER 2018

TOWN & VILLAGE OF ELLICOTTVILLE

REVISIONS	DATE	COMMENTS

EVL ENG DEPT.

STORM - ST-01